ISSN 2395-1621

Wireless Synchronization of Robotic ARM with Human ARM using Real Time Image Processing

#1Miss. Nalawade Prachi, #2Miss. Singh Garima, #3Miss. Vijaymala B, #4Mr. N.N Ghuge

1prachinalawade0@gmail.com
2garima4826@gmail.com
3vijaymalab04@gmail.com
4ghuge1974@gmail.com

#1234Department of Electrical Engineering
JSPM'S
BSIOTR, Pune, India.

ABSTRACT

This project is to design and develop a robotic arm for pick and place application ATMEGA16 microcontroller. In this system, two cameras are used as a sensor to perceive the images of the color strip. The environment is first captured as an image using webcams which is mounted in the two planes of whole region. Image processing methods are then performed to identify the location of the color strip on the human arm within the environment. Program is written in MATLAB on a computer. It calculates the centroid of the identified color intensity and according to that it sends the control commands over the serial port to the controller of robotic arm via RS-232 port. The basic objective is to catch the specific colored strip in the specified region of human arm. The proposed method does not make use of any other type of sensor other than the webcam. Finally, this prototype of the arm may be expected to overcome the problem such as placing or picking hazardous objects or non-hazardous objects that are far away from the user.

ARTICLE INFO

Article History

Received: 18th May 2016

Received in revised form : 18th May 2016

Accepted: 20th May 2016

Published online : 25th May 2016

Keywords: **Robotic arm, Image Processing, ATMEGA 16, MATLAB, Motors.**

I. INTRODUCTION

An automatic arm may be a robot manipulator, sometimes programmable, with similar functions to a person's arm. The links of such a manipulator area unit connected by joints permitting either move motion (such as in associate articulated robot) or travel (linear) displacement. The links of the manipulator may be considered to make a kinematic chain. The business finish of the kinematic chain of the manipulator is termed the top effectors and it's analogous to the human hand. The end effectors may be designed to perform any desired task such as welding, gripping, spinning etc., counting on the application. The automaton arms may be autonomous or controlled manually and might be wont to perform a range of tasks with nice accuracy. The robotic arm may be mounted or mobile (i.e. wheeled) and might be designed for industrial or home applications. Robots are crucial in numerous assembling commercial ventures. The reason is that the cost per hour to work a robot is a portion of the cost of the human work expected to perform the same capacity. More than this, once customized, robots more than once perform functions with a high exactness that surpasses that of the most experienced human administrator. Human operators are, be that as it may, much more adaptable. People can switch work undertakings effectively. Robots are manufactured and modified to be occupation particular. Robots are in the earliest stages phase of their development. As robots develop, they will turn out to be more adaptable, copying the human limit and capacity to switch work undertakings easily. While the PC has made a permanent check on society, the individual robot hasn't showed up. Clearly there's something else entirely to an individual robot than a personal computer. Robots require a blend of components to be compelling: complexity of intelligence, development, versatility, route, and reason. To start with, individual robots will concentrate on a particular capacity (work assignment) or purpose. Building a valuable individual robot is exceptionally troublesome. Be that as it may, late days Robots involves a good place in community. The primary working of mechanical autonomy in late days are. These days, robots are progressively being incorporated into working errands to supplant people particularly to

perform the dull assignment. When all is said in done, mechanical autonomy can be separated into two ranges, modern and administration apply autonomy. Worldwide Federation of Robotics (IFR) characterizes an administration robot as a robot which works semi-or completely self-governingly to perform benefit valuable to the wellbeing of people and gear, barring producing operations. These robots are as of now utilized as a part of numerous fields of uses including office, military assignments, clinic operations, perilous environment and farming. Also, it may be troublesome or perilous for people to do some particular undertakings like getting touchy chemicals, defusing bombs or in most dire outcome imaginable to pick and place the bomb some place for regulation and for rehashed pick and place activity in commercial enterprises. Along these lines a robot can be supplanted human to do work. Without gambling human life or appendage, robots can supplant people in some unsafe duty service. Take for sample bomb transfer. Robots are utilized as a part of numerous bomb squads the country over. Ordinarily these robots take after little heavily clad tanks and are guided remotely by work force utilizing camcorders attached to the front of the robot. Automated arms can snatch a suspected bomb and place it in an explosion-verification safe box for explosion and/or disposal. The upper and forearms are incited utilizing reverse kinematics. The programming is for pick and place operations. The complete insights with respect to The algorithm is evaluated in simple computer controlled jointed arm robot for pick and place operations. The complete details regarding construction of the robot and algorithm for controlling through image processing are presented in this paper [1]. Among the sensors used in robotics, the visual sensor or video camera occupies a special place because its use allows the contact-less evaluation of the work space. Using a visual sensor and processing the information contained in the acquired images allow controlling the position of a robot's actuator or to guidance a mobile robot towards a target object. To improve the precision, mostly the visual sensor, which is the extraction of the information from the image, the looking part, and the actual control of the position, the moving part, are included in a visual feedback loop, and called generally visual servo control (visual servoing). In structure "look and move" type, based on images for visual servo control of a robot is presented. [2] This paper illustrates the controlling of the movements of robotic arm according to the movements of human arm using real time image processing. The human arm and robotic arm are not connected using wires so that it can be operated in the wide range of up to 30 m irrespective of any disturbance. [4] This paper gives the idea of using CC2500 which is operated at low power wireless communication instead of other available alternative wireless module. [5] The important operating parameter sand the 64-byte transmit/ receive FIFOs of CC2500 can be controlled via an SPI interface. In a typical system, the CC2500 will be used together with a microcontroller and a few additional passive components. The ATmega16 is a low-power CMOS 16-bit microcontroller based on the AVR enhanced RISC architecture. By executing powerful instructions in a single clock cycle, the ATmega16 achieves throughputs approaching 1 MIPS per MHz allowing the system designed to optimize power consumption versus processing speed. A programmable Watchdog Timer with Internal Oscillator, an SPI serial port, and six software selectable power saving mode. A small object of low weight is placed near the robotic arm at a distance within the approach of arm. The system is made on. The operator stands at a distance from the robot and moves the finger/hand up, down, left or right. The robotic arm follows the direction. The arm is brought over the object and then lowered. The grabber is fully opened to pick up the object. The robotic arm then is moved up and rotated to another desired position, then lowered. When the arm reaches the ground floor, the grabber is given a command to release the object, which places it at the desired location. This way the robotic arm can be operated and controlled in any manner as deemed necessary by the operator from a distance, usually up to 200 meters. [6].

Block Diagram

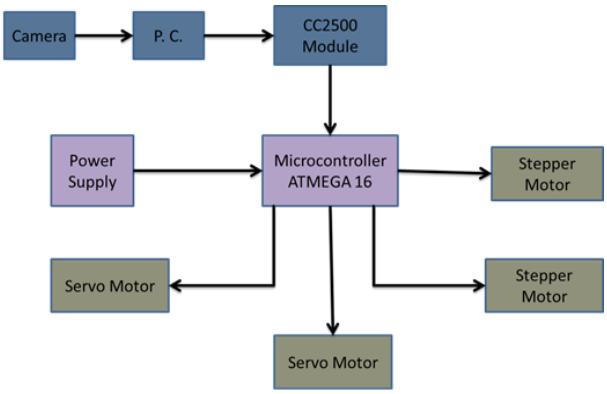

Fig. 1 Block diagram

The aim of this project is to present a method for visual servo control using only visual images from a webcam. Visual servo is the use of image data in closed loop control of a robot. Without doubt, today, the use of vision in robotic applications is rapidly increasing. This is due to the fact that vision based sensors such as webcams are falling in price more rapidly than any other sensor. It is also a richer sensor than traditional ranging devices, particularly since a camera captures much more data. Image processing is a form of signal processing where the input signals are images such as photographs or video frames. The output could be a transformed version of the input image or a set of characteristics or parameters related to the image. Images can be captured by camera, and subsequently, processed using some MATLAB software. MATLAB focuses mainly on real time image processing. Information obtained from the image processing exercise can then be used to generate motion commands to be sent to the robotic system.

II. COMPONENTS

Robotics is the branch of mechanical engineering, electrical engineering and computer science that deals with the design, construction, operation, and application of robots, as well as computer systems for their control, sensory feedback, and information processing. Cartesian robot are used for pick and place work, application of sealant, assembly operations, handling machine tools and arc welding. It's a robot whose arm has three prismatic joints, whose axes are coincident with a Cartesian coordinator. The robotic arm is made up of acrylic sheet**.**

Fig. 2. Robot

CAMERA

A webcam is a video camera that feeds its images in real time to a computer or computer network, often via USB, Ethernet, or Wi-Fi. Their most popular use is the establishment of video links, permitting computers to act as videophones or videoconference stations. The common use as a video camera for the World Wide Web gave the webcam its name. Other popular uses include security surveillance, computer vision, video broadcasting, and for recording social videos. The very first task in image processing algorithm is to get the actual vide feed from camera. The starts to capture the video frame by frame, afterwards these frames are used in order to do apply further image processing algorithm.

SERVO MOTOR

Servo refers to an error sensing feedback control which is used to correct the performance of a system. Servo or RC restricted in between the fixed angles. The Servos are used for precision positioning. They are used in robotic arms and legs, sensor scanners and in RC toys like RC helicopter, airplanes and cars. Servo motors are a type of electromechanical actuators that do not rotate continuously like DC/AC or stepper motors; rather, they are used to position and hold some object. They are used where continuous rotation is not required so they are not used to drive wheels (unless a servo is modified). In contrast they are used where something is needed to move to particular position and then stopped and hold there. The servo motor can be moved to a desired angular position by sending PWM (pulse width modulated) signals on the control wire. The servo understands the language of pulse position modulation. A pulse of width varying from 1 millisecond to 2 milliseconds in a repeated time frame is sent to the servo for around 50 times in a second. The width of the pulse determines the angular position. Servos also employ a feedback mechanism, so it can sense an error in its positioning and correct it. This is called servomechanism. Say if you ask servo to go and lock itself to 30 degrees and then try to rotate it with your hand, the servo will try hard and its best to overcome the force and keep servo locked in its specified angle. Controlling a servo is easy by using a microcontroller, no external driver like h-bridge etc. are required. Just a control signal is needed to be feed to the servo to position it in any specified angle. The frequency of the control signal is 50 Hz (i.e. the period is 20ms) and the width of positive pulse controls the angle. We can use the AVR microcontrollers PWM feature to control servo motors. In this way the PWM with automatically generate signals to lock servo and the CPU is free to do other tasks.

CC2500 MODULE

Wireless module used in our project is CC2500 module. The CC2500 is a low-cost 2.4 GHz transceiver designed for very low-power wireless applications. The RF transceiver is integrated with a highly configurable base band modem. The modem supports various modulation formats and has a configurable data rate up to 500 k Baud rate. CC2500 provides extensive hardware support for packet handling, data buffering, burst transmissions, clear channel assessment, link quality indication and wake-on-radio. The main operating parameters and the 64-byte transmit/receive FIFOs of CC2500 can be controlled via an SPI interface. In a typical system, the CC2500 will be used together with a microcontroller and a few additional passive components.

TRANSMITTING AND RECEIVING

To get the most out of the system, it was better to transfer the data wirelessly. This was done with the help of RF module communication between the Robotic Arm and PC. The CC2500 Module is used in the process, which is low power transceiver module with high speed MCU and capability RF IC. It has high sensitivity and strong interference circumstance as well.

STEPPER MOTOR

Stepper motor is found in a lot of applications such as computer peripherals, business machines, process control, machine tools and robotics. Especially in different areas of robotics, process control like silicon processing, I.C. Bonding Servo Motors are DC motors equipped with a servo mechanism for precise control of angular position. The RC servo motors usually have a rotation limit from 90° to 18 and Laser trimming applications, it is necessary to control the stepper motor from remote places.

ATMEGA16

In this project ATMEGA 16 microcontroller is used to drive the actuators or the servo motors. The required PWM signals are generated using this microcontroller. The microcontroller receives the angles of the joint servo motors from computer via RS-232 port, for this USART (Universal synchronous asynchronous receive and transmission) module of ATMEGA16 is used. The code is written in the microcontroller to continuously receive the angles of servo motors and to generate the required PWM signals. The MAX232 is a dual driver/receiver that includes a capacitive voltage generator to supply EIA-232 voltage levels from a single 5-V supply. The RS 232 is not compatible with micro controllers, so a line driver converts the RS 232's signals to TTL voltage levels. It is a 16 pin DIP package. The MAX232 is a dual driver/receiver that includes a capacitive voltage generator to supply voltage level from a single 5-V supply. In this project, the computer sends the angle of servo motors to

the microcontroller serially via RS232 port. The IC MAX232 is used for the purpose of level convertor. In this way, serial communication between computer and microcontroller is set up.

III. IMAGE PROCESSING

We have created a (graphical user interface) GUI software for these applications and can interface that GUI with an external camera which will be mounted on a PC, and can be able to capture the images of human arm movement and the further processing of the images will take place with the help of the developed GUI. The developed GUI is shown in the fig 3.1 below. Each item on a MATLAB GUI is a graphical component. The types of components include graphical controls (pushbuttons, edit boxes, lists, sliders, etc.). A pushbutton is a component that a user can click on to trigger a specific action. The pushbutton generates a callback when the user clicks the mouse on it. As shown in the fig there are 5 pushbuttons named according to movement to be captured such as up-down, left-right, forward-backward.

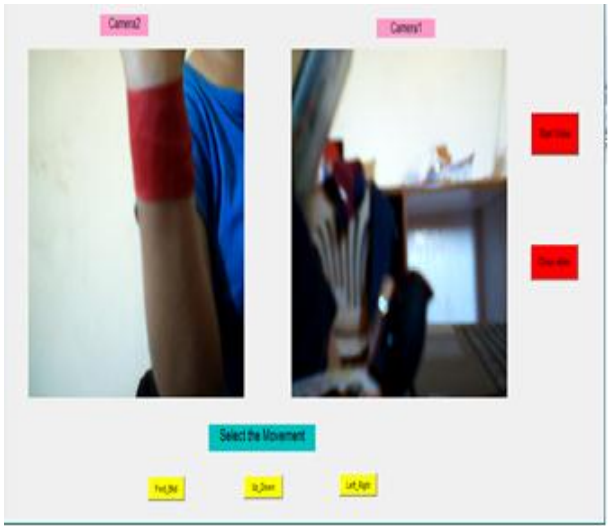

Fig 3. GUI of project

Human arm which will consist of red color band the camera acting as sensor will detect red color from the captured images. At starting essential shading modular is utilized for an acknowledgment process, it just perceiving red color. In each image, essential color are sectioned and portioned color is perceived to recognize. The pixels colors are numbered after sectioned it. At whatever point it gets above 300 pixels of the red color it recognizes that the given color is found. Additionally alternate colors are moreover ignored. Color image contains 24 bits per pixel it is reduced into 8 bits per pixel by is the process of conversion from color images into gray scale image. Most commonly gray levels represent the interval number of quantization in gray scale image processing. At present, the most commonly used storage method is 8-bit storage. There are 256 gray levels in an 8 bit gray scale image, and the intensity of each pixel can have from 0 to 255. The following images are formed after capturing which are converted into gray scale. The images captured and converted into gray scale are shown in the fig 3 below.

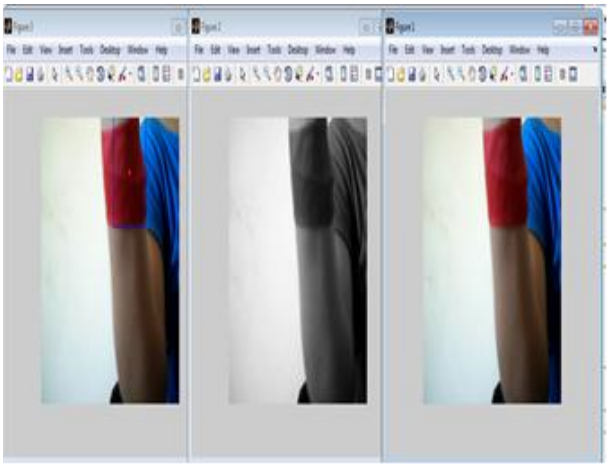

Fig. 3. Converted into gray scale output

ROBOTIC ARM MECHANISM

It's an essential automated arm mounted on a surface Controlled with the assistance of Atmega controller advancement board. Every joints of the automated arm is associated with the servo engines. Mechanical arm contains 3 joints aggregate of 2 servo motors were utilized 1 servo motor to control the pivot of the surface of the mechanical arm for up-down movement and 1 more servo motor to control the lock of the grabber for left-right movement, 4 stepper motor are used for movement of board for forward-backward movement.

IV. APPLICATIONS

Such sorts of mechanical arms can be put to use in different sorts of uses as takes after:

i. Control of different elements of robots in challenging and dusty airs mechanical employments as in painting shops, shot impacting chambers and so forth. The administrator controls the mechanical capacities from outside the dangerous chambers looking through a glass entryway.

ii. Programmed picking of little protests (bottles, sacks, tumblers and so forth) proceeding onward a transport and setting at other sought area in commercial enterprises. Producing different sorts of beauty care products, sustenance items, prescriptions and so forth.

iii. Programmed metal cutting machines specifically seek profiles, which are situated in high temperature zones.

iv. Progressed automated toys, worked with condition of-craftsmanship hand worked control frameworks.

v. Robots controlled cranes, lifting forks and so on worked from a separation with fingers/hands controlled remote framework.

V. RESULTS

A small object of low weight is placed near the robotic arm at a distance within the approach of arm. The system is made on. The operator stands at a distance from the robot and moves the finger/hand up, down, left or right. The robotic arm follows the direction. The arm is brought over the object and then lowered. The grabber is fully opened to pick up the object. The robotic arm then is moved up and rotated to another desired position, then lowered. When the arm reaches the ground floor, the grabber is given a command to release

the object, which places it at the desired location. This way the robotic arm can be operated and controlled in any manner as deemed necessary by the operator from a distance, usually up to 30 meters.

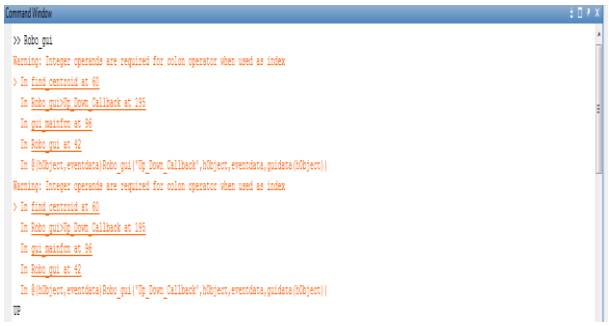

Fig 5

REFERENCES

[1]Controlling the position of jointed arm robot using image processing for pick and place operationsAuthor: Ch.R. Vikram Kumar, P. Bharath Arun

[2]Image-Based Visual Servo Control of a Robotic Arm by Using Cellular Neural Networks Alexandru Gacsádi*, Virgil Tiponuţ, Péter Szolgay

[3]Hausila Singh and Sudhansu Sharma, “Some Novel microprocessor based configurations for controllingRemotely Located stepper Motors as Actuators of control valves”, IEEE Transaction on industrial electronics,AUGUST 1991, 38(4), PP 283-287..

[4]Robotic arm movements wirelessly synchronized with human armmovements using real time image processing Abdullah Shaikh, GandharKhaladkar, Rhutuja Jage, Tripti Pathak Javed TailiM. H. Saboo Siddik College of Engineering, Mumbai-08shaikh.abdullah.salim@gmail.com

[5] Hand Gestures Remote Controlled Robotic Arm Shamsheer Verma B.Tech (ICE), Bharati Vidyapeeth College Of Engineering, New Delhi.

[6]Mohamed Naufal bin Omar,“Pick and place robotic arm controlled by Computer”, UniversititeknikalMalaysia, Melaka April

[7]Yanjianghuang, ryosukechiba, tamioarai, tsuyoshiueyama and junota. ,“Integrateddesign of multi-robot system for pick-and-place tasks”, Proceeding of theIEEE International conference on robotics and biomimetic (ROBIO) Shenzhen, china, December 2013.

[8]Yan Meng, Hanqi Zhuang, “Self-Calibration of Camera-Equipped Robot Manipulators”, The International Journal of Robotics Research, SAGE Publications Ltd, London, UK,sVol. 20, No. 11, 909-921, 2001

[9]http://www.engineersgarage.com/electronic-components/16x2-lcd module-datasheet

[10] www.mathworks.in/products/matlab/

[11]http://www.mcselec.com/?option=com_content&task=view&id=14&Itemid=41

[12]robokits.co.in/.../USB%20Programmer%20documentation

[13]http://www.bpesolutions.com/bpemanuals/servo.info.pdf

